by MM Store
Specialist in Kinderkamers

SOFIA BED 200X90 CM 1647

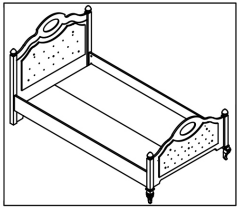

ACCESSORIES LIST

ACCESSORIE NO		
114	M6*15 YSB VİDA	20 ADET
380	KARYOLA BAĞLANTISI M049	2 ADET
032	MANNESMAN 910 DELİKLİ	3 ADET
391	ÖZEL MİNİFİX MİL	8 ADET
390	ÖZEL MİNİFİX GÖVDE	8 ADET
379	LÜKENS AYAK	2 ADET
105	M6*30 VİDA	12 ADET
144	M6 SOMUN	5 ADET
004	ø8x30 KAVELA	4 ADET
109	M6*45 VİDA	3 ADET
420	PLS.KARYOLA AYAK	3 ADET

YEDEK AKSESUAR SİPARİŞLERİNİ RESME BAKARAK VERİNİZ. (Örn:ACCESSORIE.NO:008 - RAFİX MİL - 1 Ad.)
PLEASE ORDER THE ACCESSORIES ACCORDING TO THE REFERENCE NUMBER ON THE DRAWING(EXAMPLE ACCESSORIE NO-008 RAFIX MIL 1.PCS.)

PARTS LIST

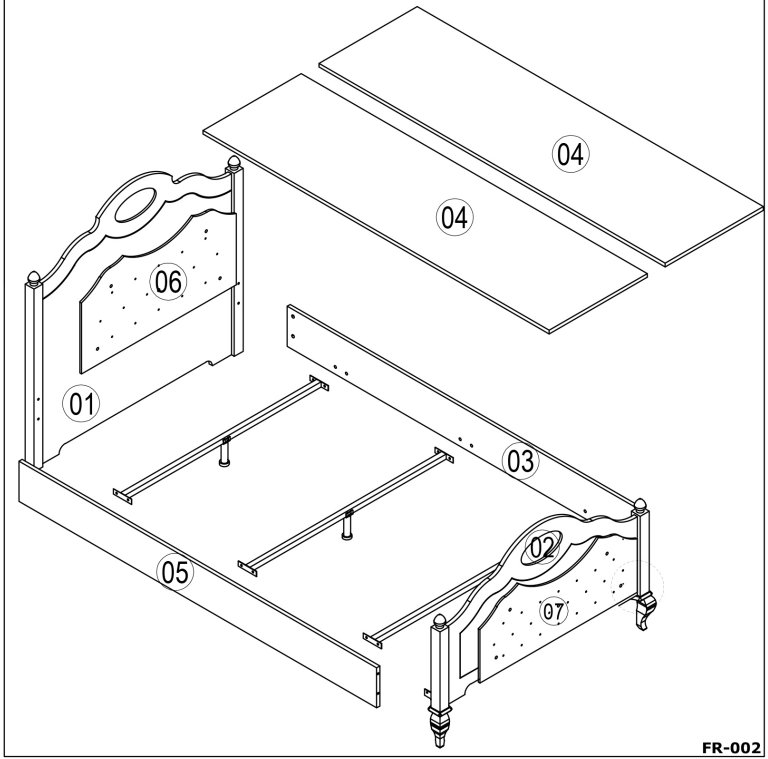

FR-002

NO	ADET/PCS		NO	ADET/PCS		NO	ADET/PCS	
1	1							
2	1							
3	1							
4	2							
5	1							
6	1							
7	1							

YEDEK PARÇA SİPARİŞLERİNİ RESME BAKARAK PARÇA NUMARASINA GÖRE VERİNİZ
PLEASE ORDER THE SPARE PARTS ACCORDING TO THE REFERENCE NUMBER ON THE DRAWING

INSTALLATION STEPS

01

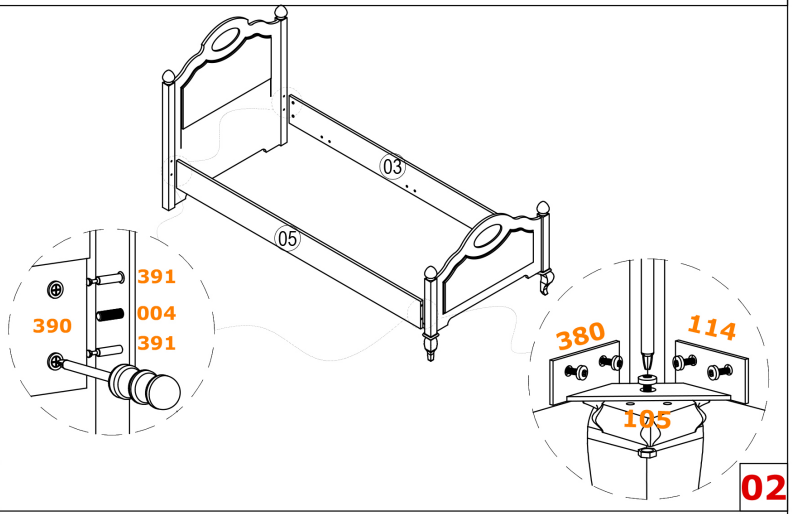

02

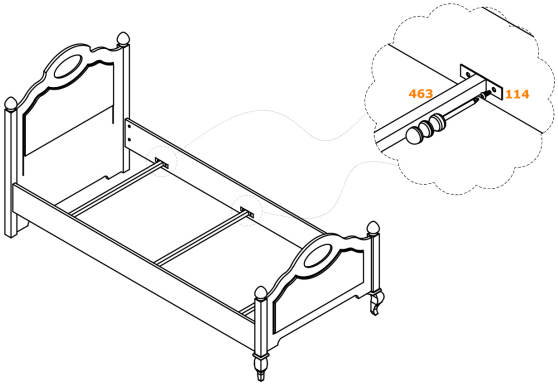

03

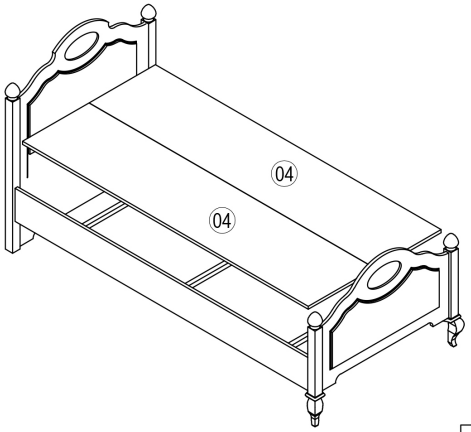

04