orpak

GRUP : PINK HOUSE
GROUP : PINK HOUSE
ÜRÜN : YENI RANZA
PRODUCT : BUNKBED
RENK : DOĞAL HUŞ&PEMBE
COLOUR : NATURAL BIRCH&PINK
KOD : 2184
CODE : 2184

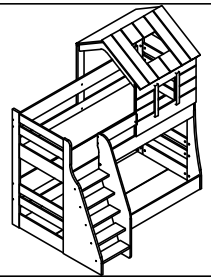

AKSESUAR LİSTESİ / ACCESSORIES LIST

ACCESSORIE NO	DESCRIPTION	QUANTITY
002	TİTUS MİNİFİX GÖVDE	68 ADET
041	MİNİFİX ARA MİL(68mm)	27 ADET
020	MİNİFİX TAPA BEYAZ	56 ADET
001	MİNİFİX MİL 6 MM	14 ADET
004	ø8x30 KAVELA	88 ADET
125	M6*60 ALYAN VİDA	22 ADET
510	ø15 METAL SİLİNDİRİK SOMUN	22 ADET
031	KARYOLA MENTEŞE	8 ADET
114	M6*15 YSB VİDA	44 ADET
122	M6*30 ALYAN VİDA	6 ADET
092	4*18 MM S. VİDASI	32 ADET
032	MANNESMAN 910	3 ADET
131	4mm ALYAN ANAHTAR	2 ADET
582	QFİX VİDASI M ø6x9 mm	1 ADET
563	RAFİX MİL (11)	8 ADET
564	QFİX KAPAK BEYAZ	1 ADET

YEDEK AKSESUAR SİPARİŞLERİNİ RESME BAKARAK VERİNİZ. (Örn:ACCESSORIE.NO:008 - RAFİX MİL - 1 Ad.)
PLEASE ORDER THE ACCESSORIES ACCORDING TO THE REFERENCE NUMBER ON THE DRAWING(EXAMPLE ACCESSORIE NO-008 RAFIX MIL 1.PCS.)

orpak

PARÇA LİSTESİ
PARTS LIST

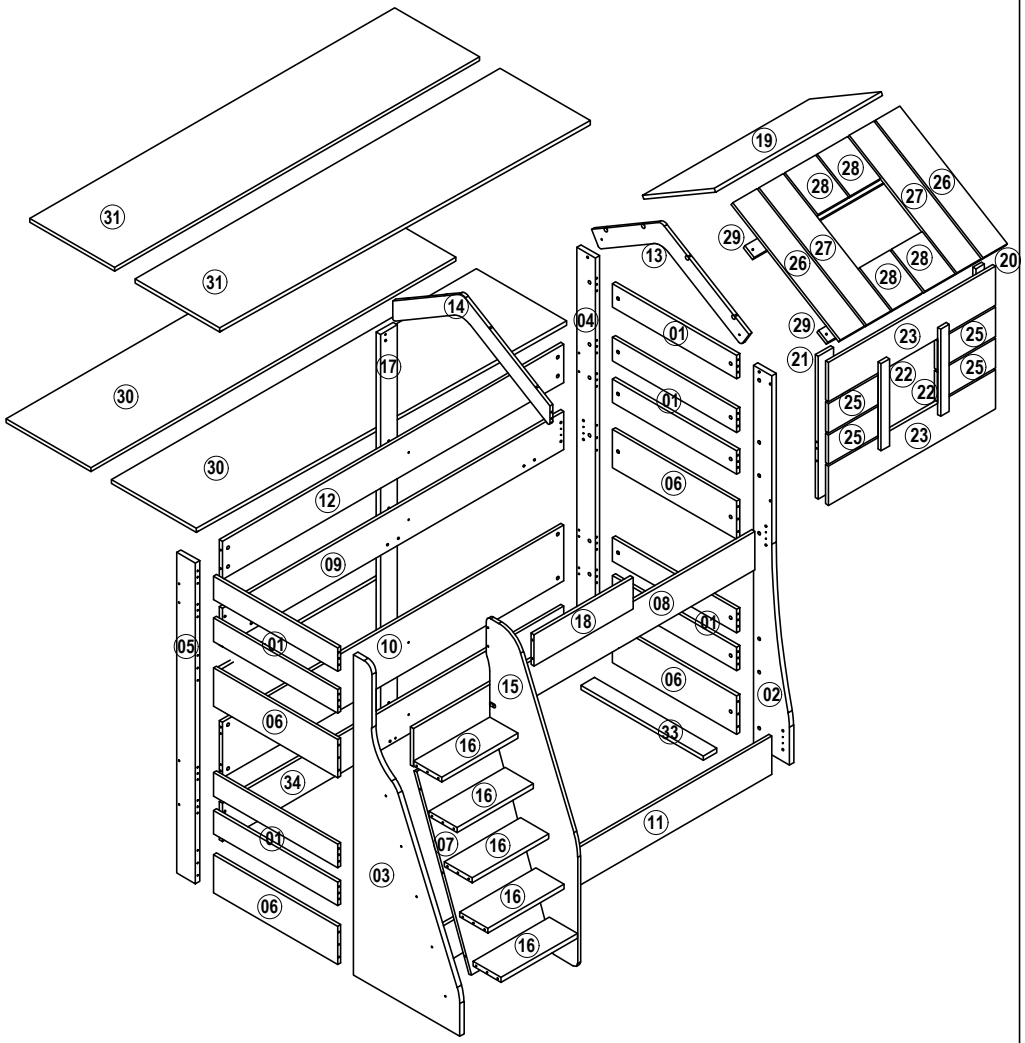

FR-002

NO	ADET/PCS	ÖLÇÜ/DIMENSIONS	NO	ADET/PCS	ÖLÇÜ/DIMENSIONS	NO	ADET/PCS	ÖLÇÜ/DIMENSIONS
01	9	733 X 120	11	1	2015 X 196	31	2	1950 X 452
02	1	1937 X 214	12	1	2015 X 196	33	3	1010 X 86
03	1	1638 X 628	13	1	931 X 381	34	1	2015 X 196
04	1	2018 X 110	14	1	928 X 407	35	1	986 X 742
05	1	1639 X 110	15	1	1532 X 541			
06	4	733 X 196	16	5	450 X 166			
07	1	936 X 450	17	1	2007 X 100			
08	1	2015 X 196	18	1	585 X 160			
09	1	2015 X 196	19	1	986 X 491			
10	1	2015 X 285	30	2	1950 X 502			

YEDEK PARÇA SİPARİŞLERİNİ RESME BAKARAK PARÇA NUMARASINA GÖRE VERİNİZ
PLEASE ORDER THE SPARE PARTS ACCORDING TO THE REFERENCE NUMBER ON THE DRAWING

orpak®

MONTAJ ADIMLARI
INSTALLATION STEPS

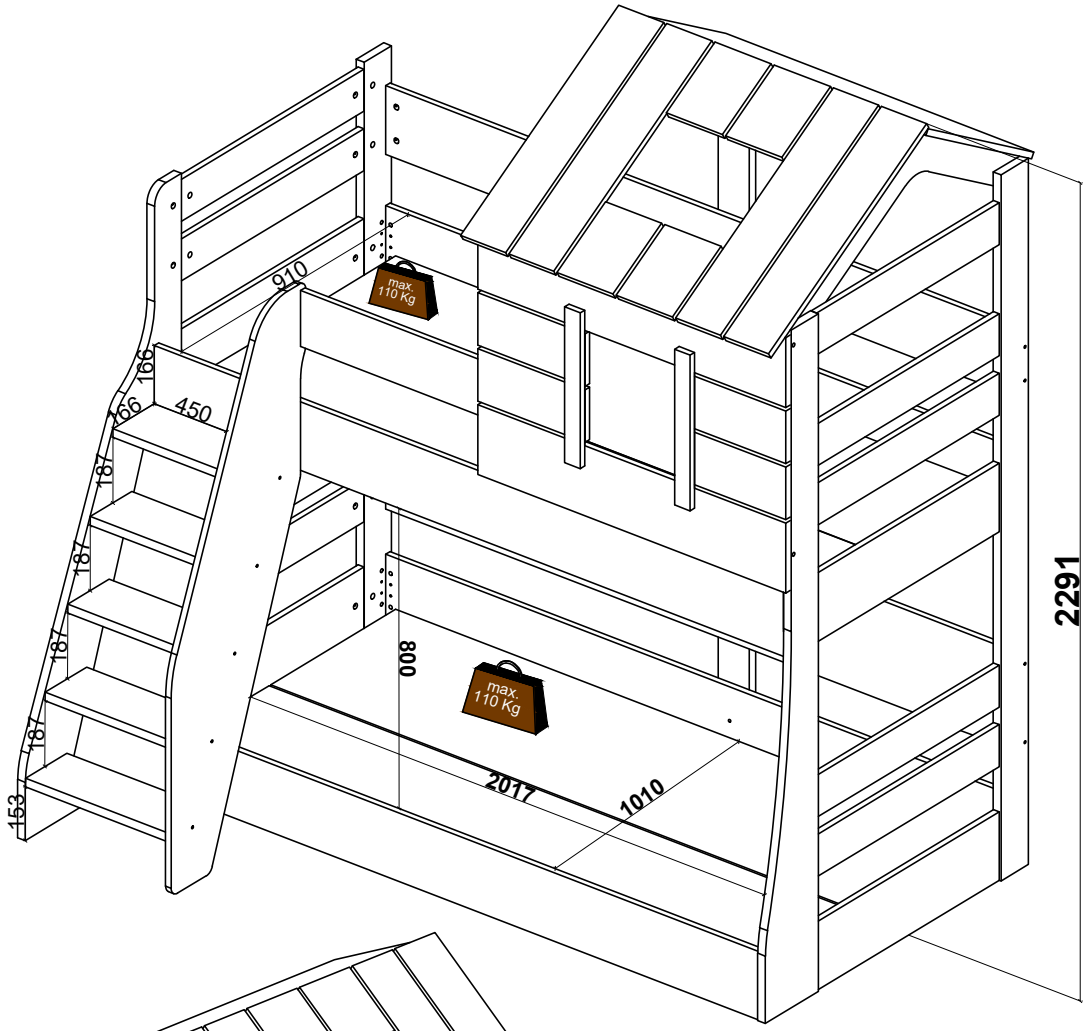

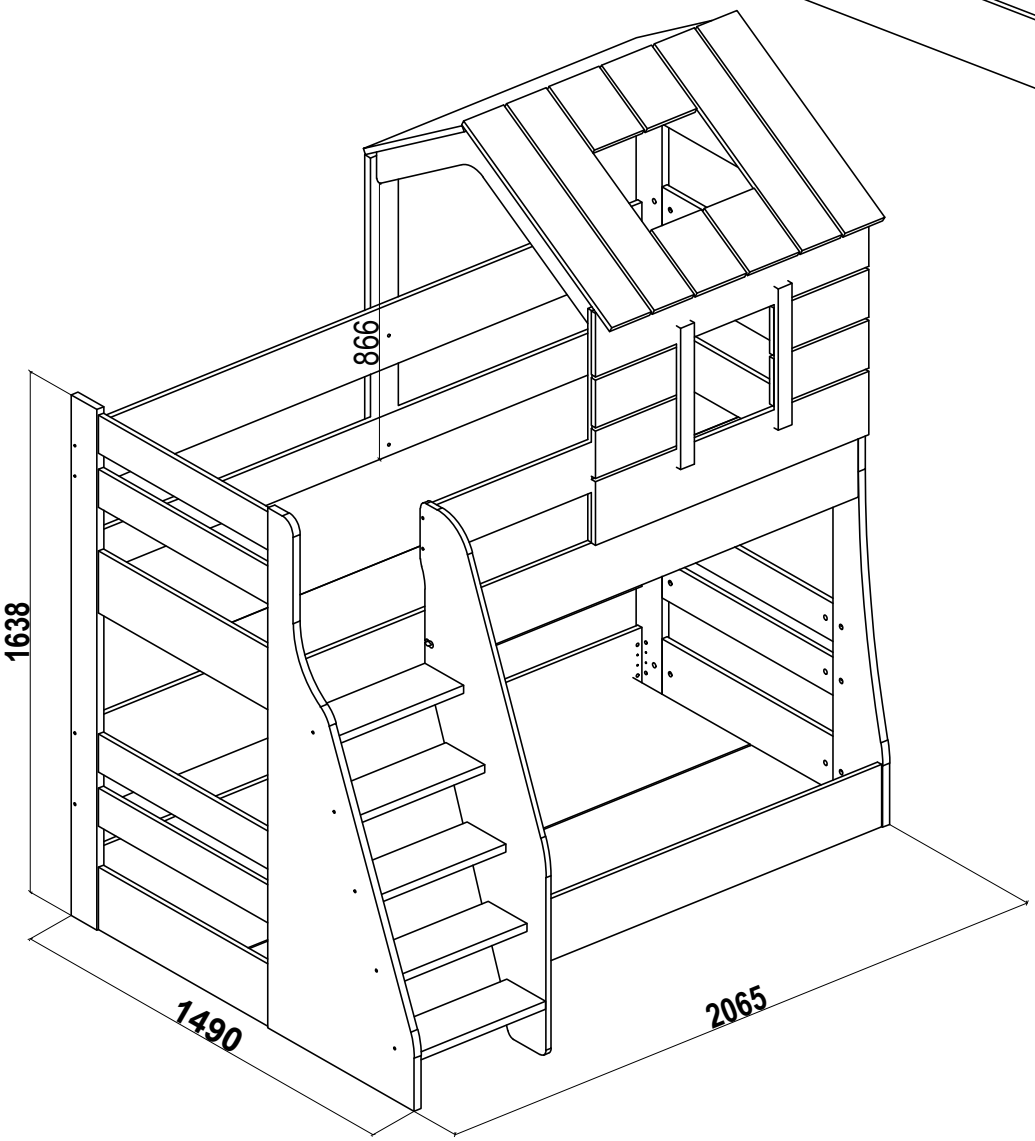

Quality Endorsed Company
ISO 9001 Lic. No. 5198

orpak

MONTAJ ADIMLARI / INSTALLATION STEPS

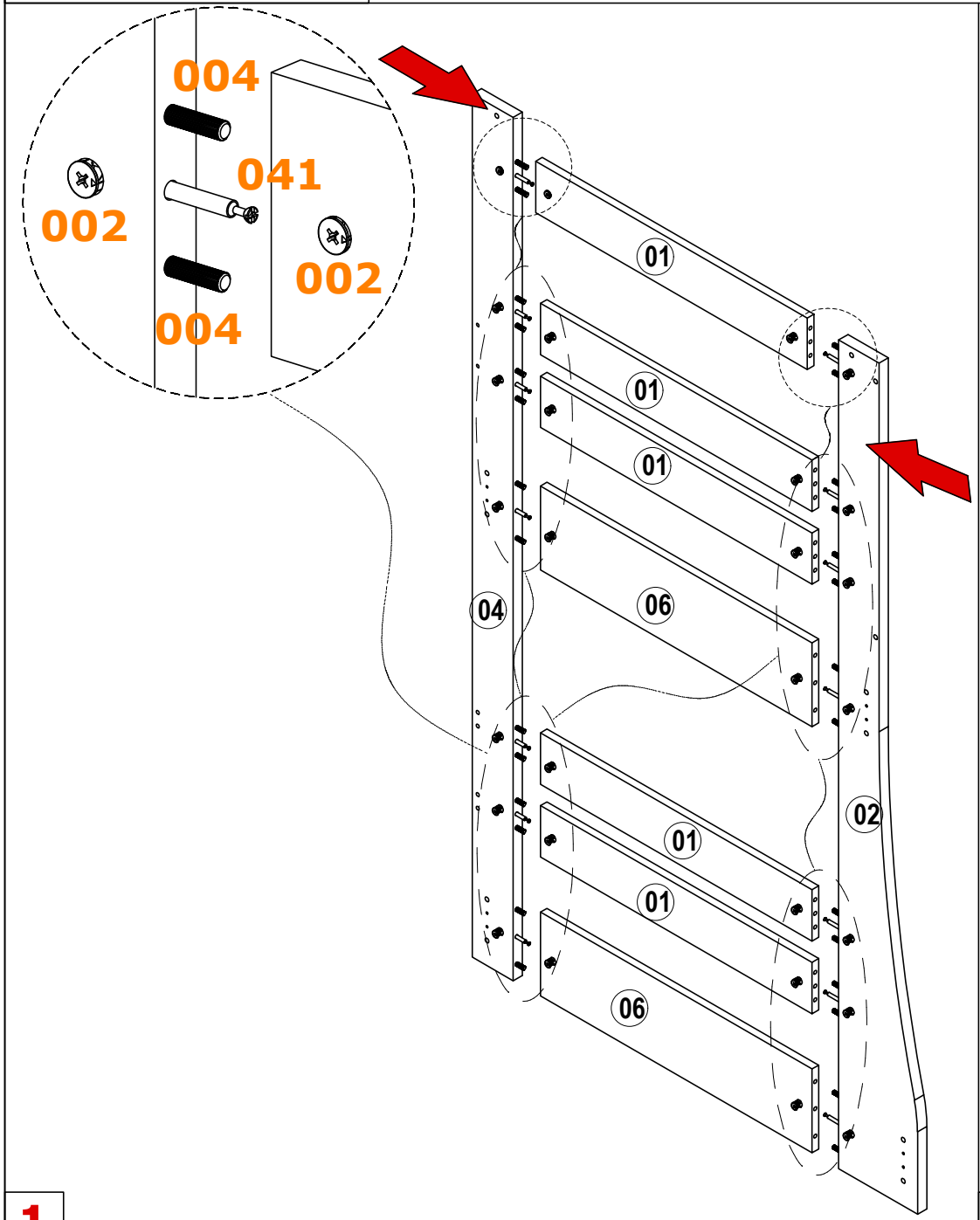

1

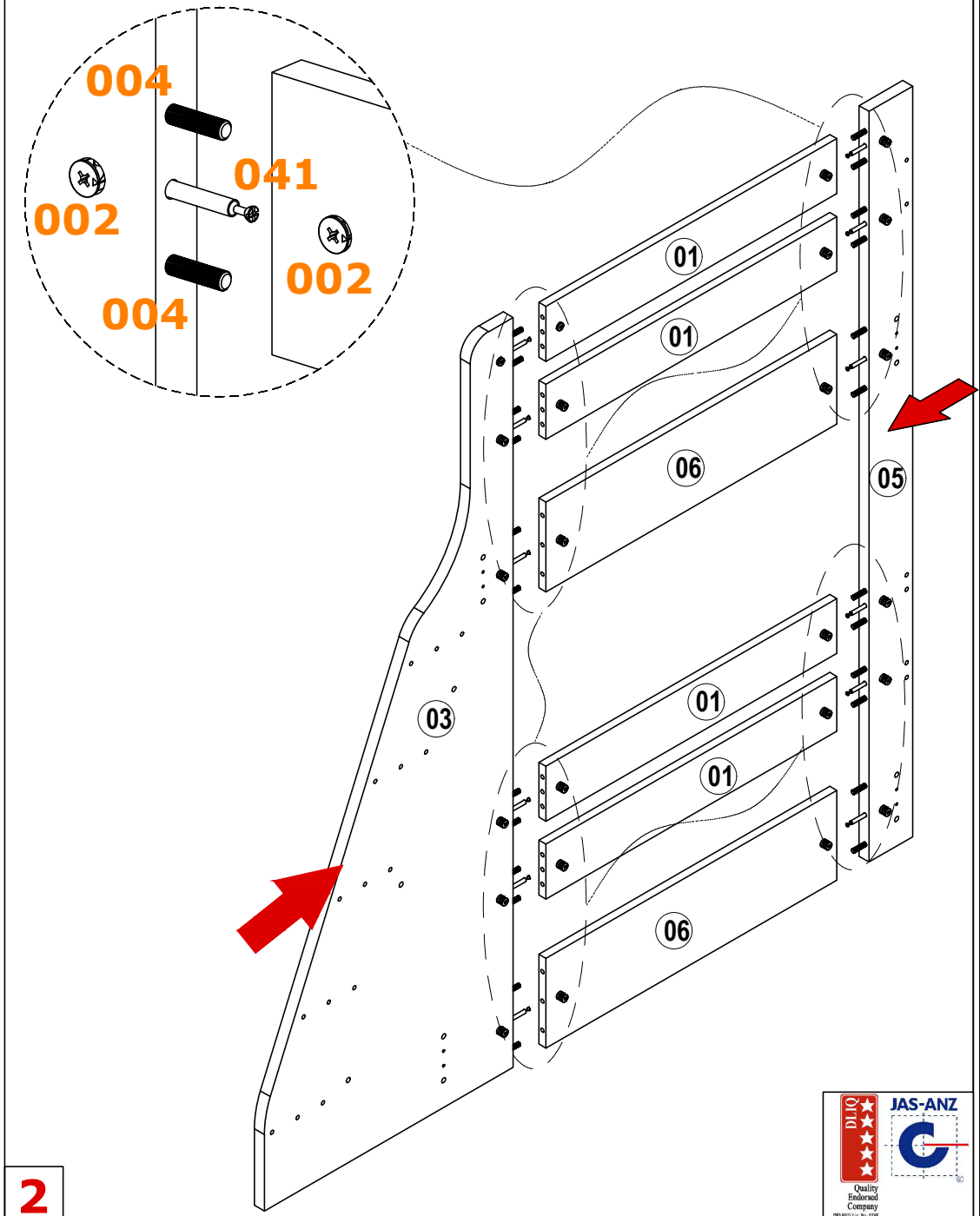

2

DLIQ
Quality Endorsed Company
ISO 9001 Lic. No. 0248
JAS-ANZ

MONTAJ ADIMLARI / INSTALLATION STEPS

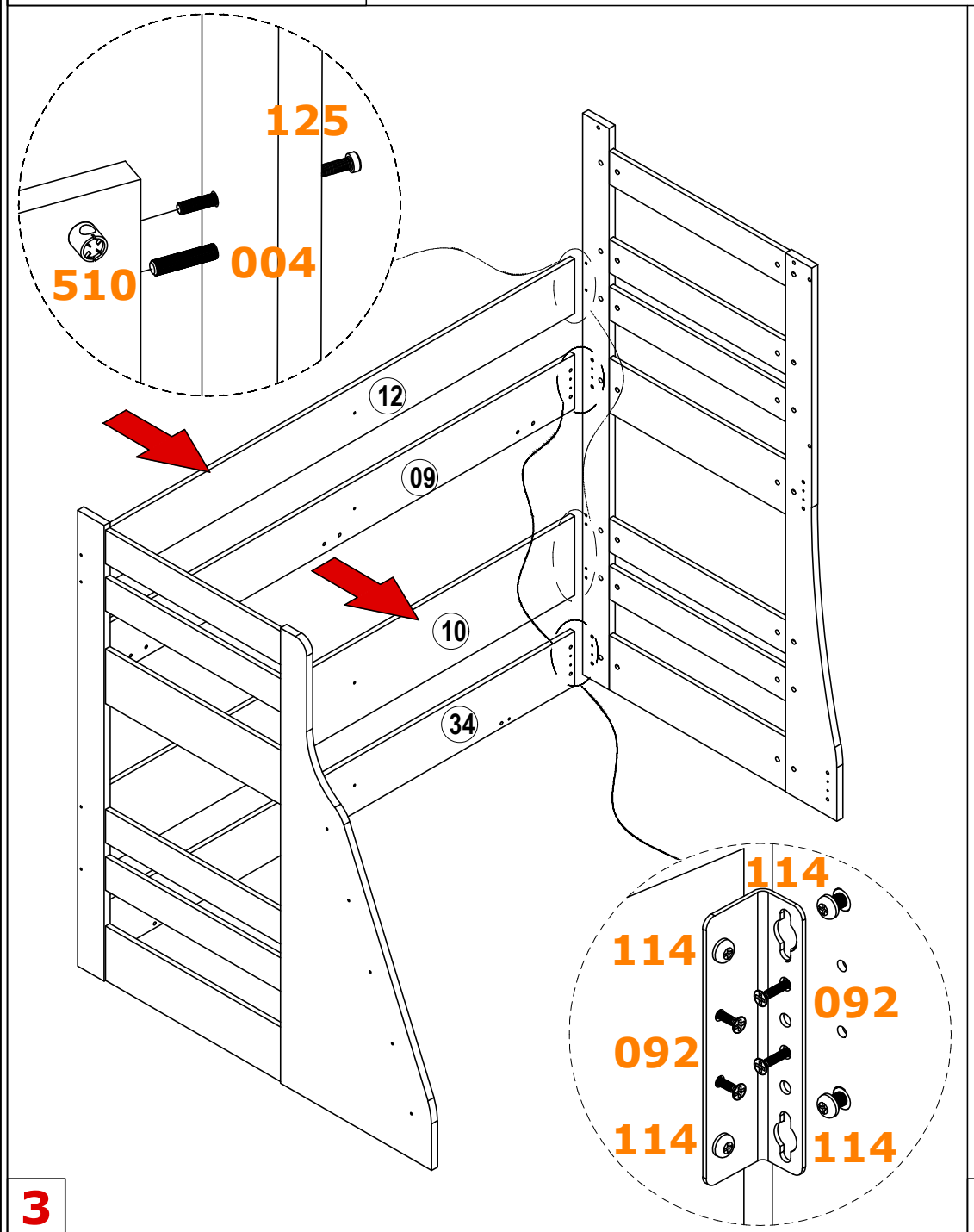

3

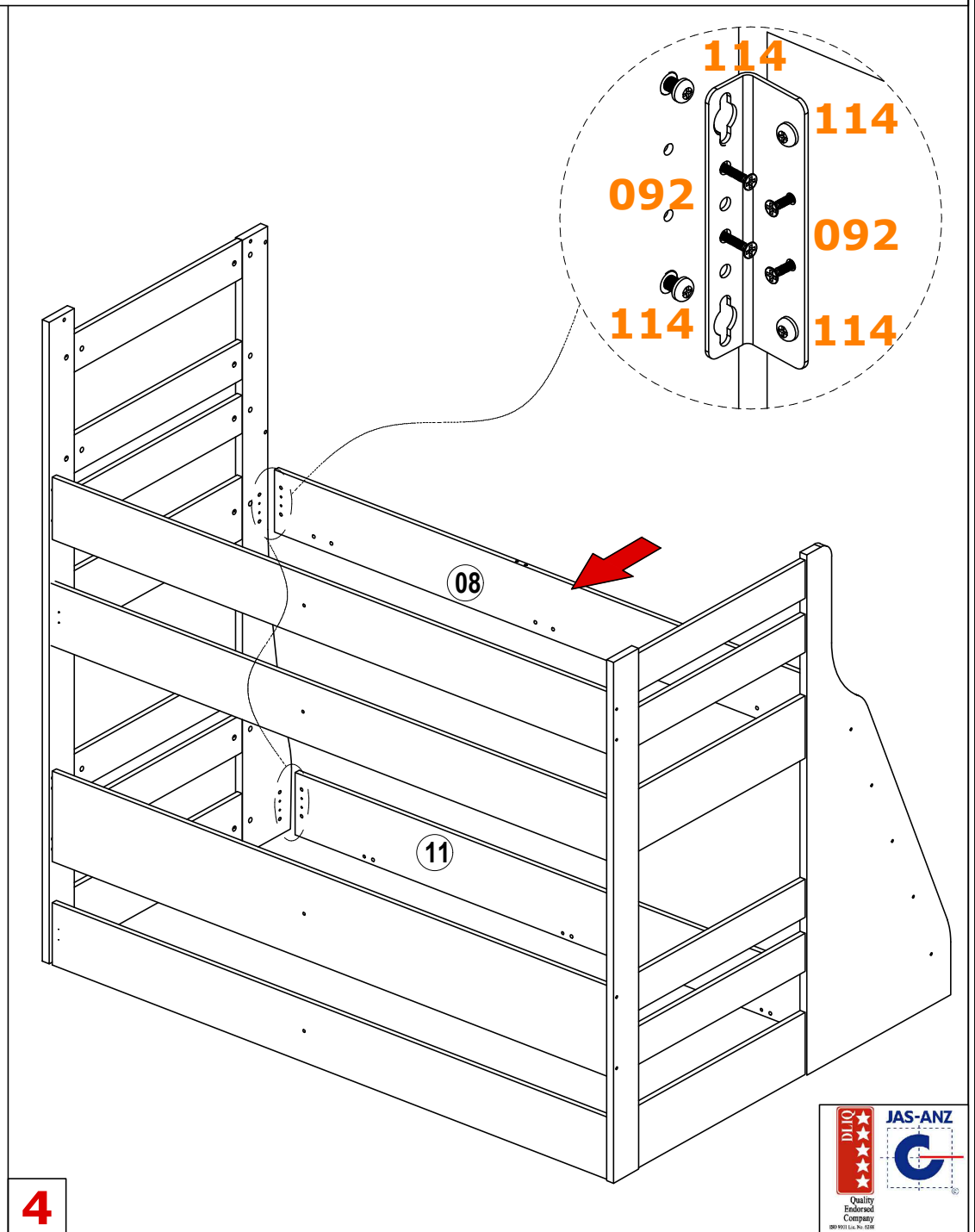

4

DLIQ
Quality Endorsed Company
ISO 9001 Lic. No. 0248
JAS-ANZ

orpak

MONTAJ ADIMLARI / INSTALLATION STEPS

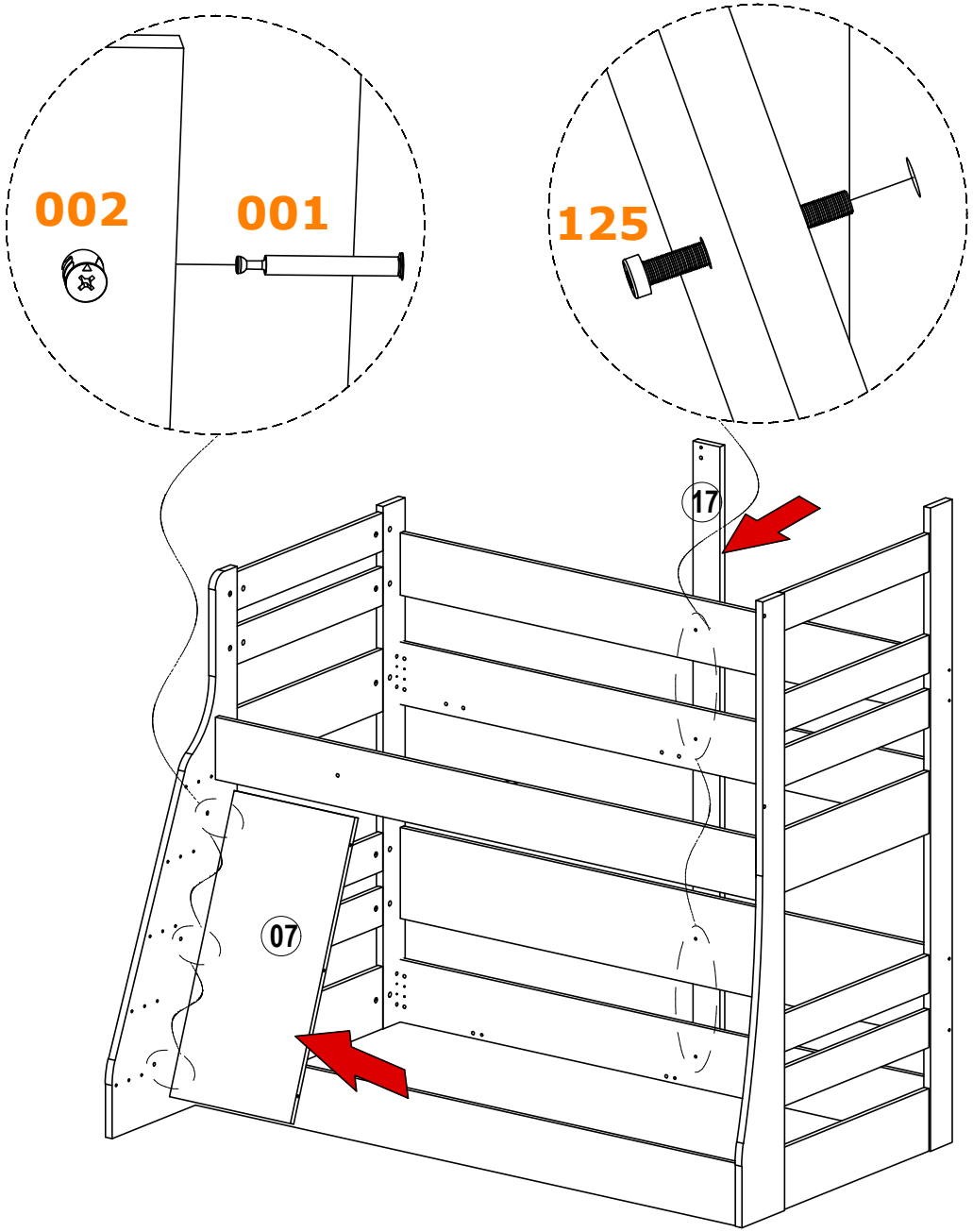

5

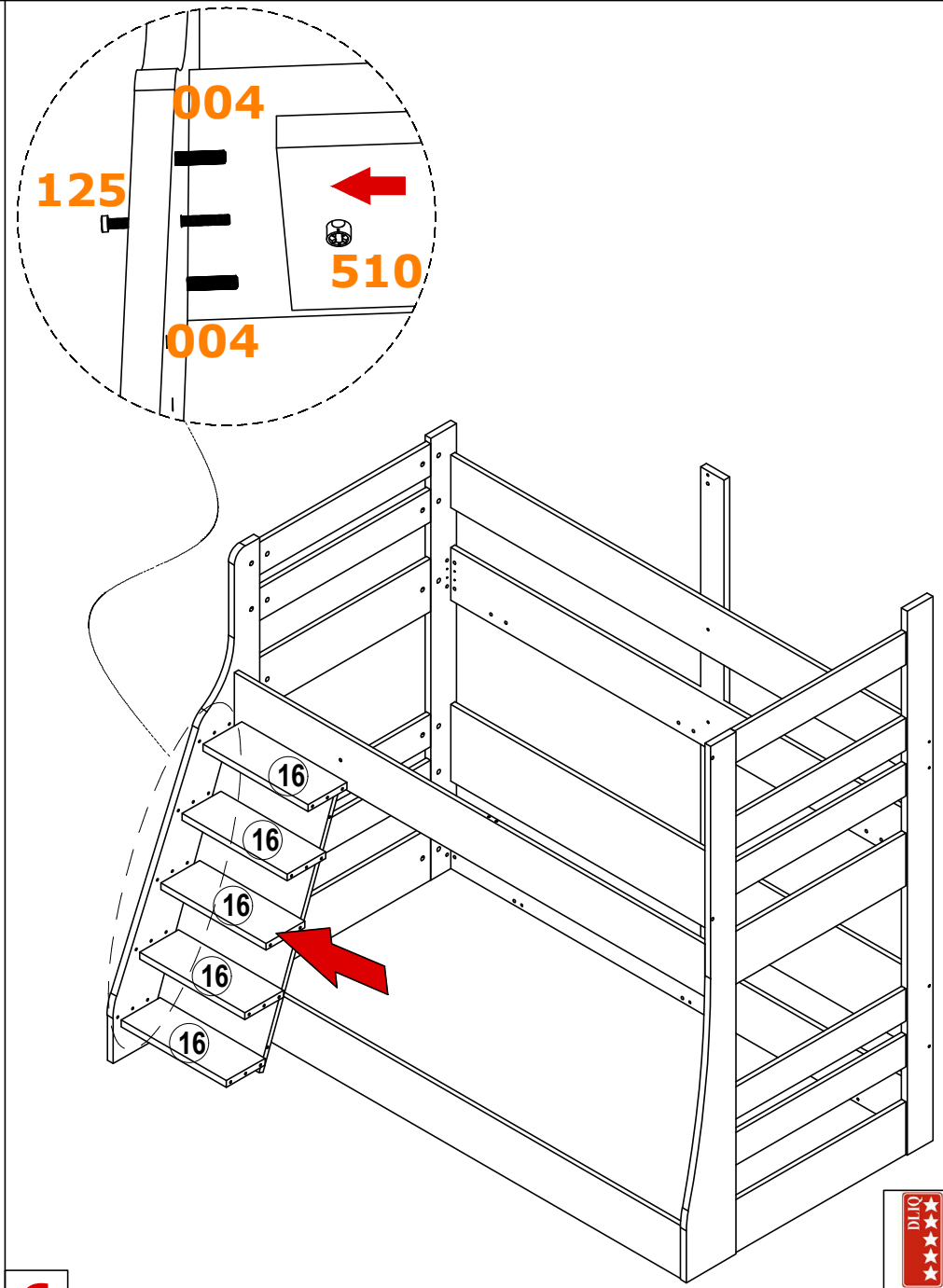

6

DLIQ
JAS-ANZ
Quality Endorsed Company
ISO 9001 Lic. No. 5248

orpak

MONTAJ ADIMLARI / INSTALLATION STEPS

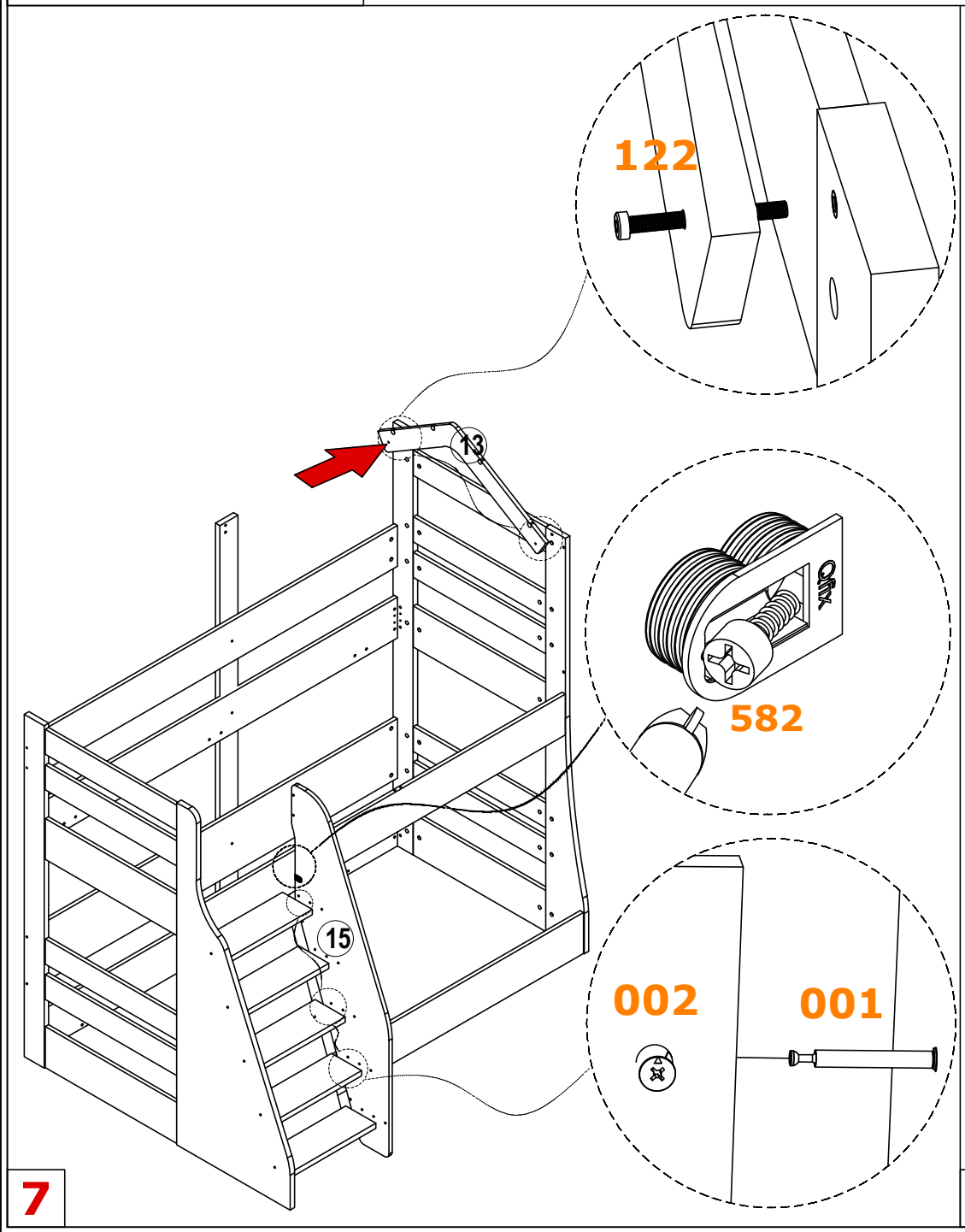

7

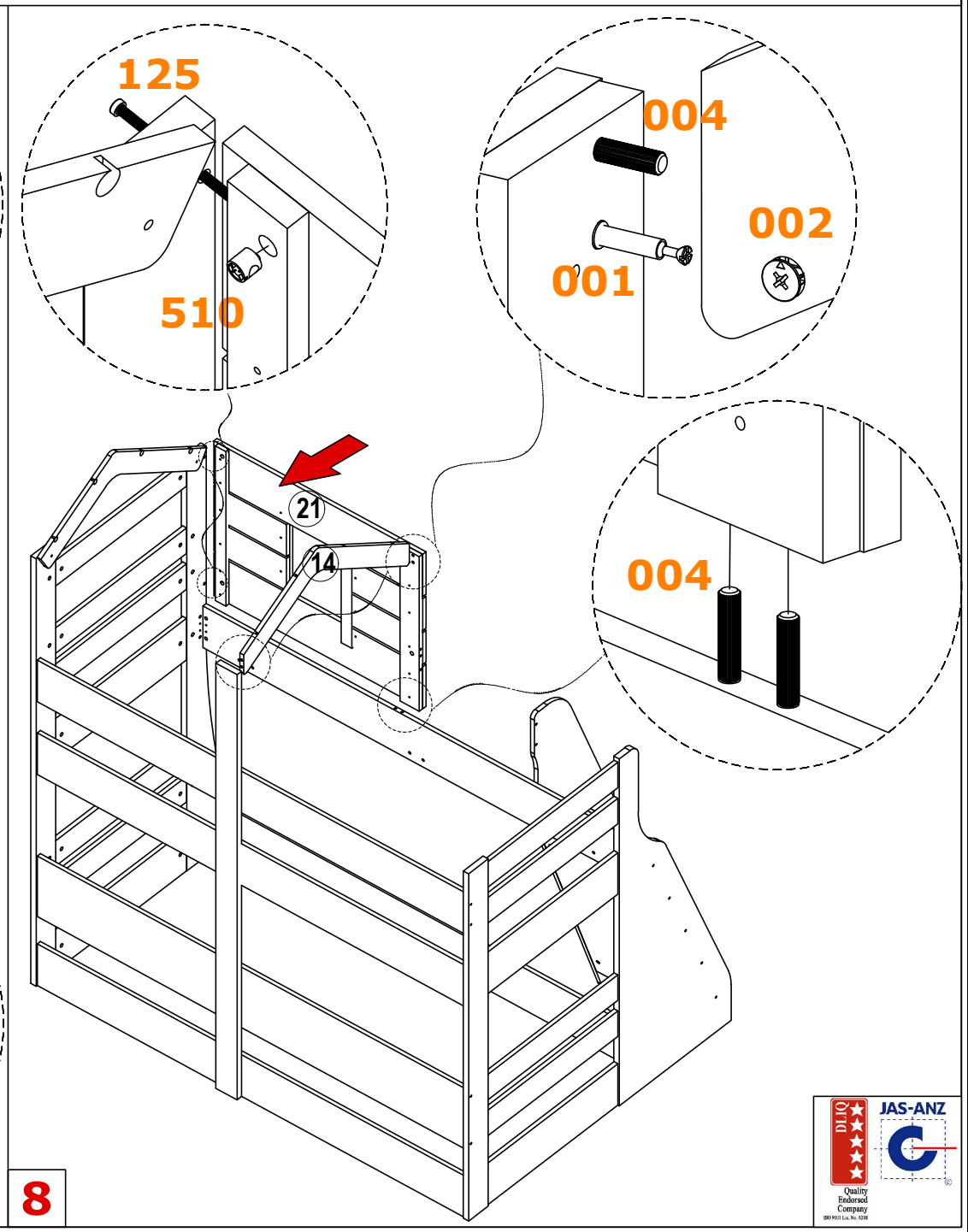

8

DLIQ
Quality Endorsed Company
ISO 9001 Lic. No. 0248
JAS-ANZ

orpak

MONTAJ ADIMLARI / INSTALLATION STEPS

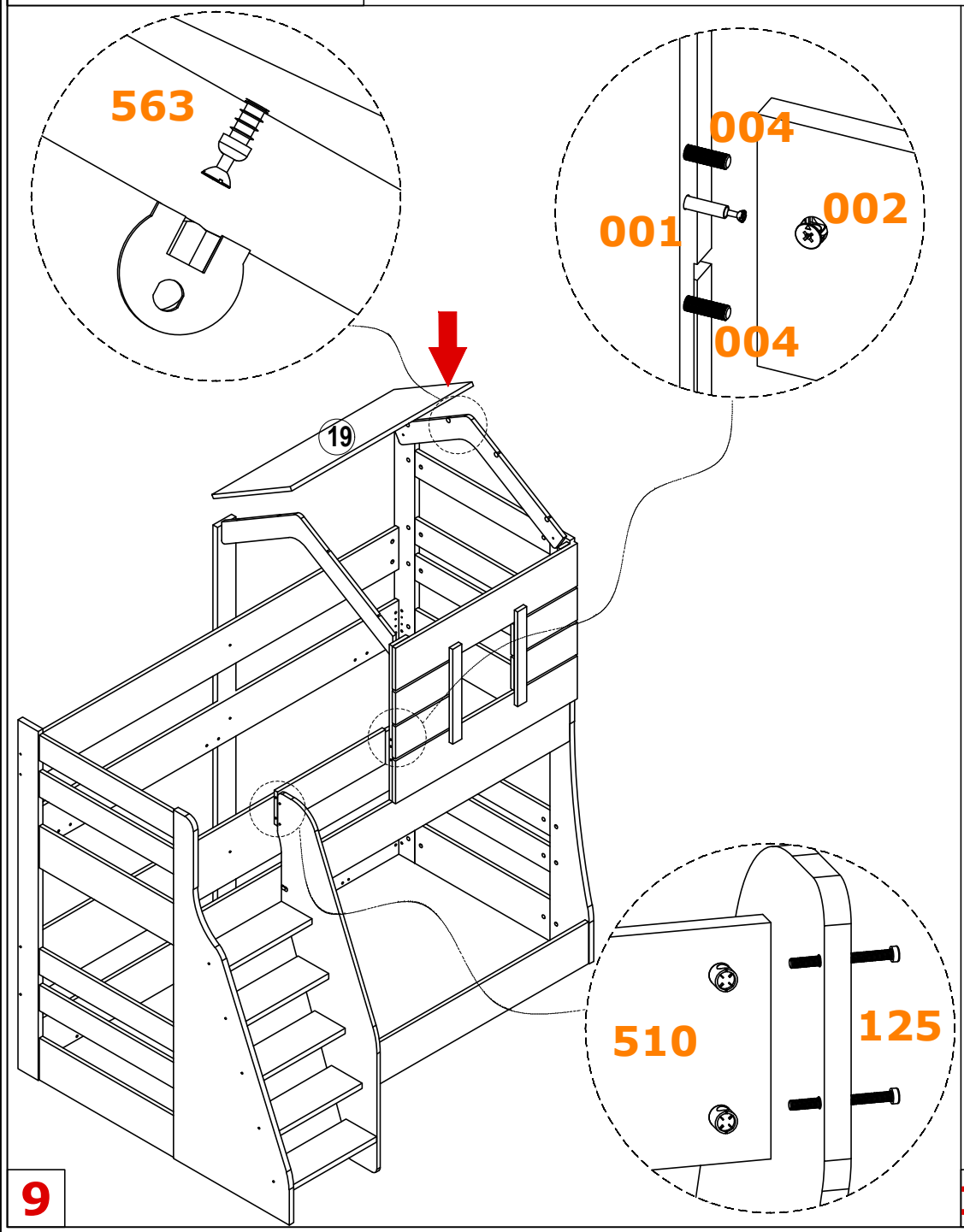

9

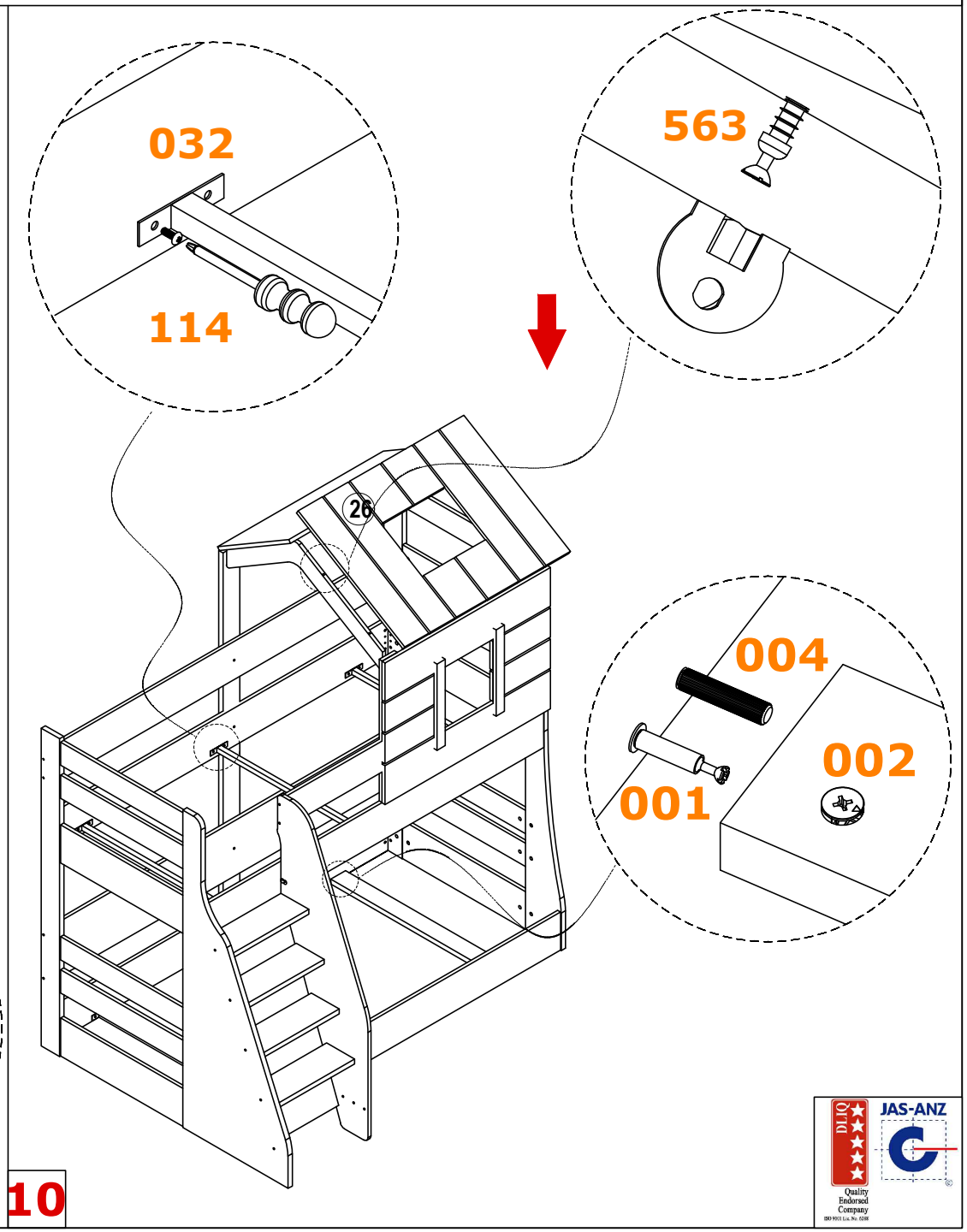

10

DLIQ
Quality Endorsed Company
ISO 9001 Lic. No. 0248
JAS-ANZ

orpak®

MONTAJ ADIMLARI / INSTALLATION STEPS

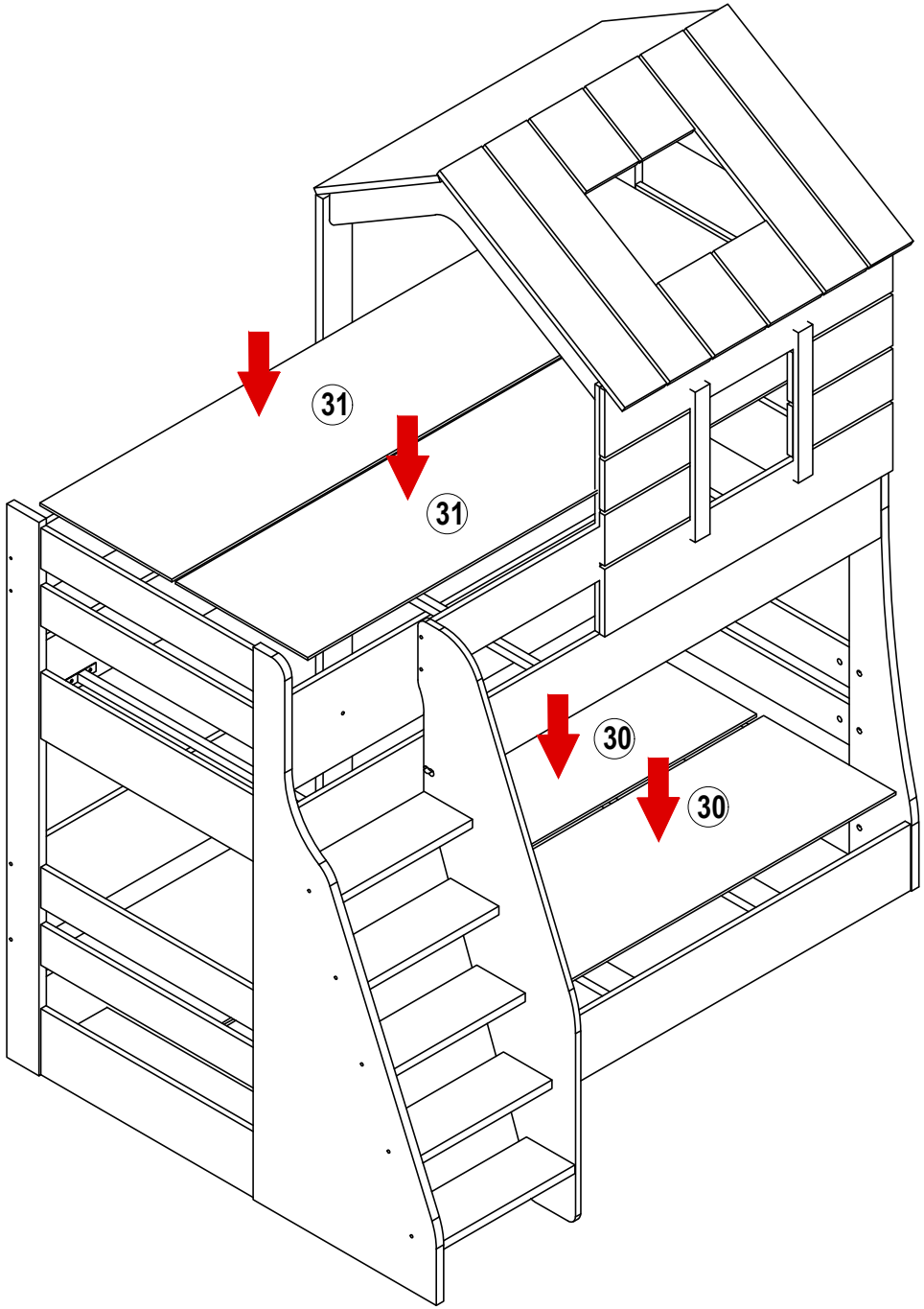

DLIQ
Quality Endorsed Company
ISO 9001 Lic. No. 5248
JAS-ANZ